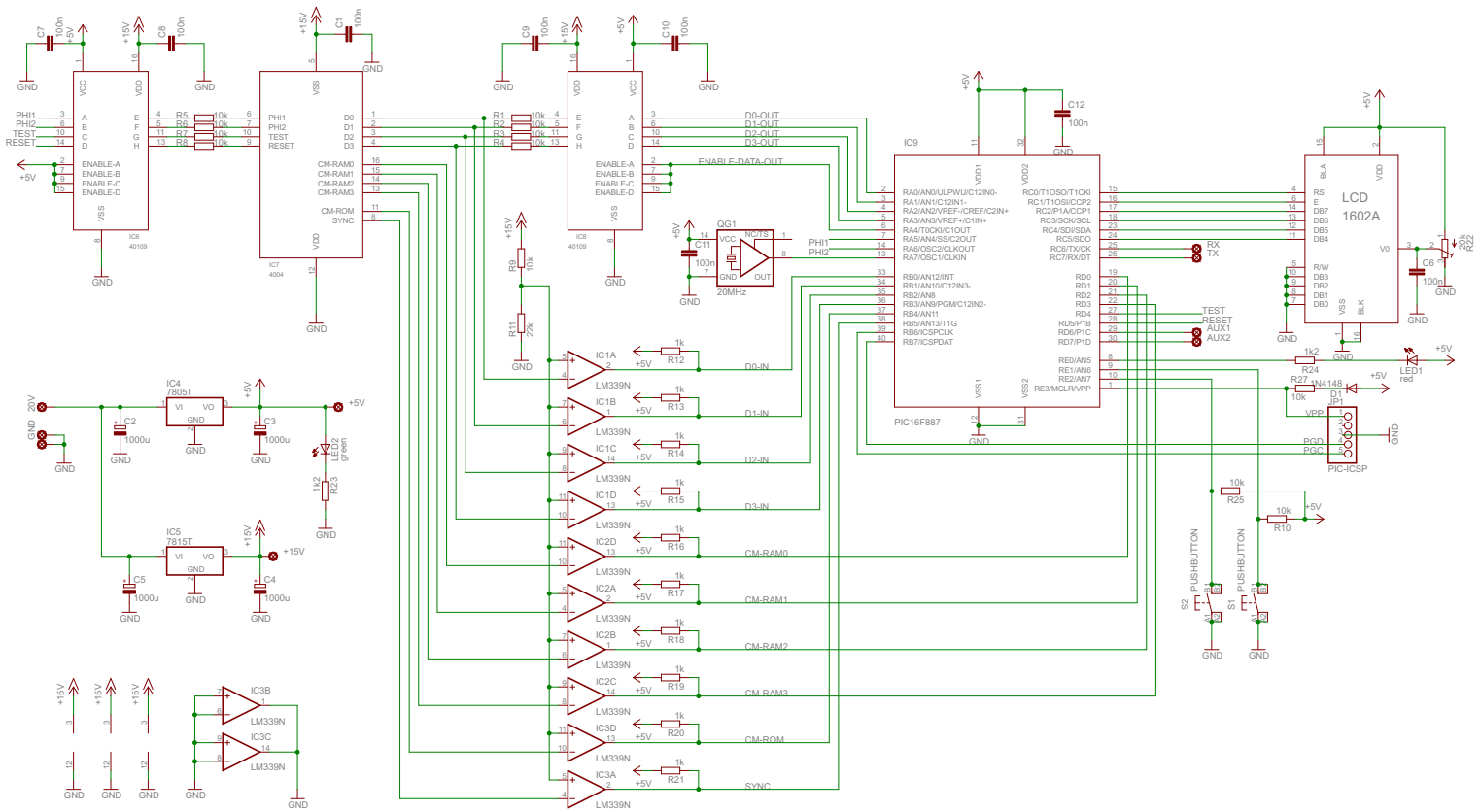
IC6
40109
IC7
4004
IC8
40109
IC9
PIC16F887
LCD
1602A
PIC-ICSP
IC4
7805T
IC5
7815T
LM339N
QG1
20MHz
PUSHBUTTON
LED2
green
LED1
red
D1
1N4148
JP1
PHI1
PHI2
TEST
RESET
ENABLE-A
ENABLE-B
ENABLE-C
ENABLE-D
CM-RAM0
CM-RAM1
CM-RAM2
CM-RAM3
CM-ROM
SYNC
D0-OUT
D1-OUT
D2-OUT
D3-OUT
ENABLE-DATA-OUT
D0-IN
D1-IN
D2-IN
D3-IN
RX
TX
AUX1
AUX2
VPP
PGD
PGC
+5V
+15V
GND